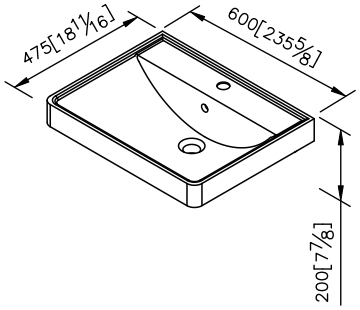
475[18 11/16]
600[23 5/8]
200[7 7/8]

unit: mm[inch]

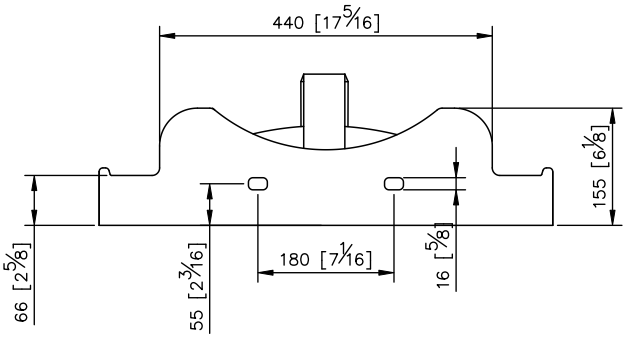
440 [17 5/16]
155 [6 1/8]
66 [2 5/8]
55 [2 3/16]
180 [7 1/16]
16 [5/8]

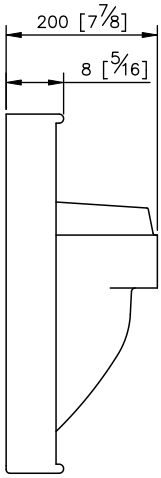
200 [7 7/8]
8 [5/16]

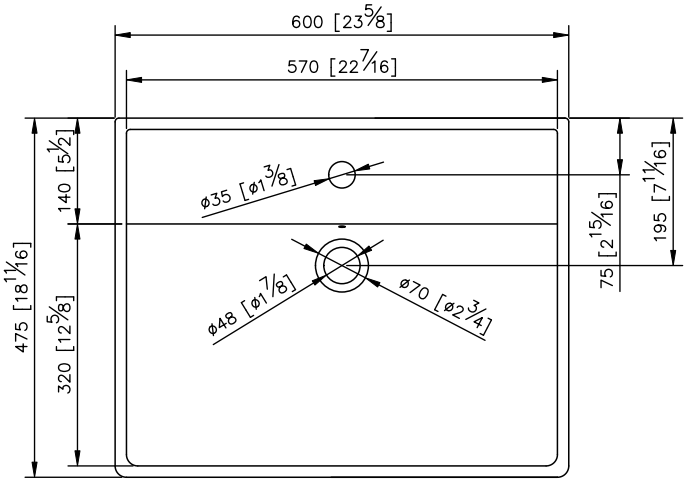
600 [23 5/8]
570 [22 7/16]
140 [5 1/2]
ø35 [ø1 3/8]
195 [7 11/16]
75 [2 15/16]
475 [18 11/16]
320 [12 5/8]
ø48 [ø1 7/8]
ø70 [ø2 3/4]