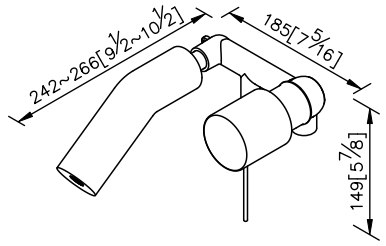
242~266[9½~10½]
185[7 5/16]
149[5 7/8]

unit: mm[inch]

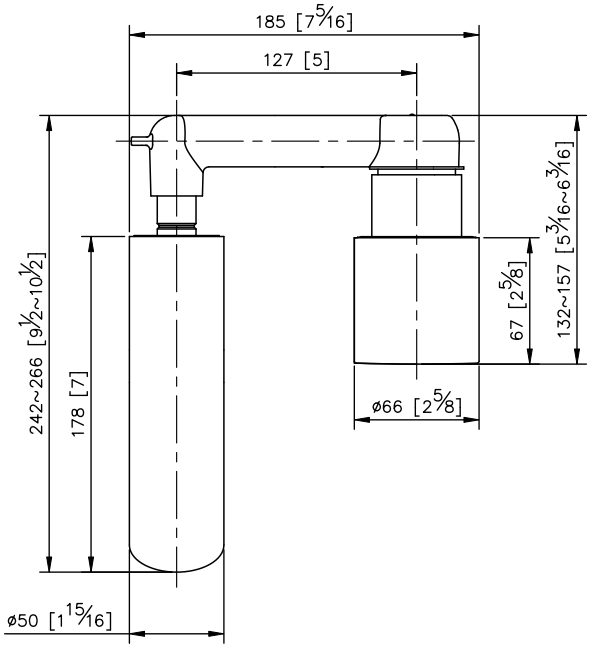
185 [7 5/16]
127 [5]
242~266 [9½~10½]
178 [7]
67 [2 5/8]
132~157 [5 3/16~6 3/16]
ø66 [2 5/8]
ø50 [1 15/16]

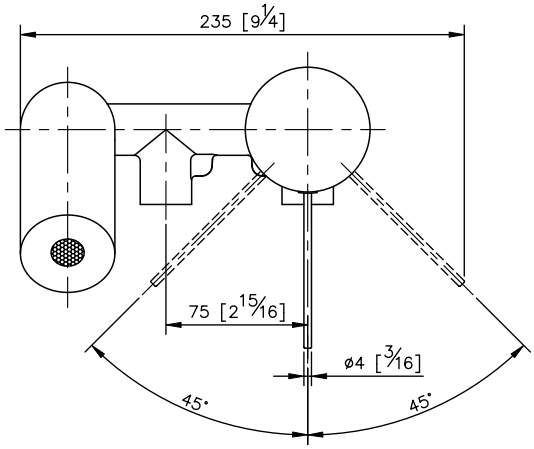
235 [9¼]
75 [2 15/16]
ø4 [3/16]
45°
45°

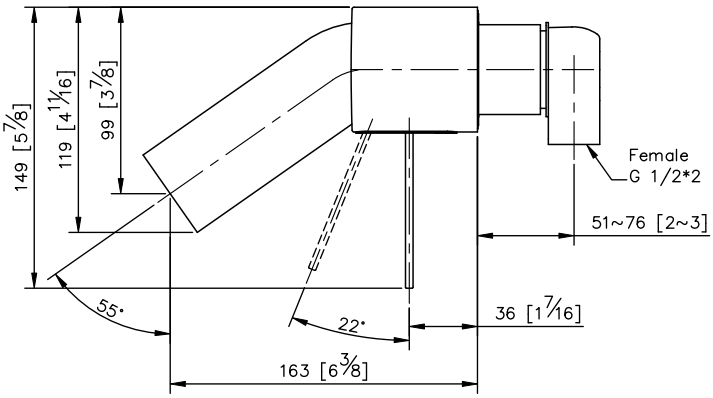
149 [5 7/8]
119 [4 11/16]
99 [3 7/8]
Female
G 1/2*2
51~76 [2~3]
55°
22°
36 [1 7/16]
163 [6 3/8]